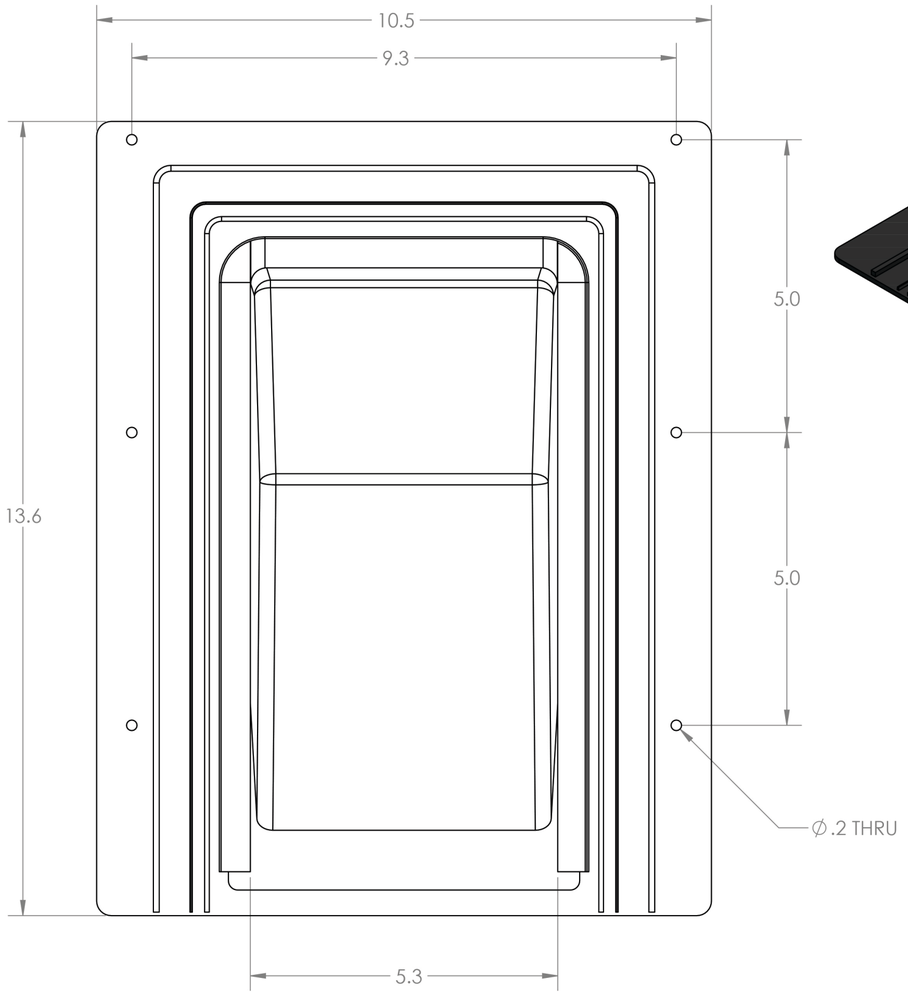

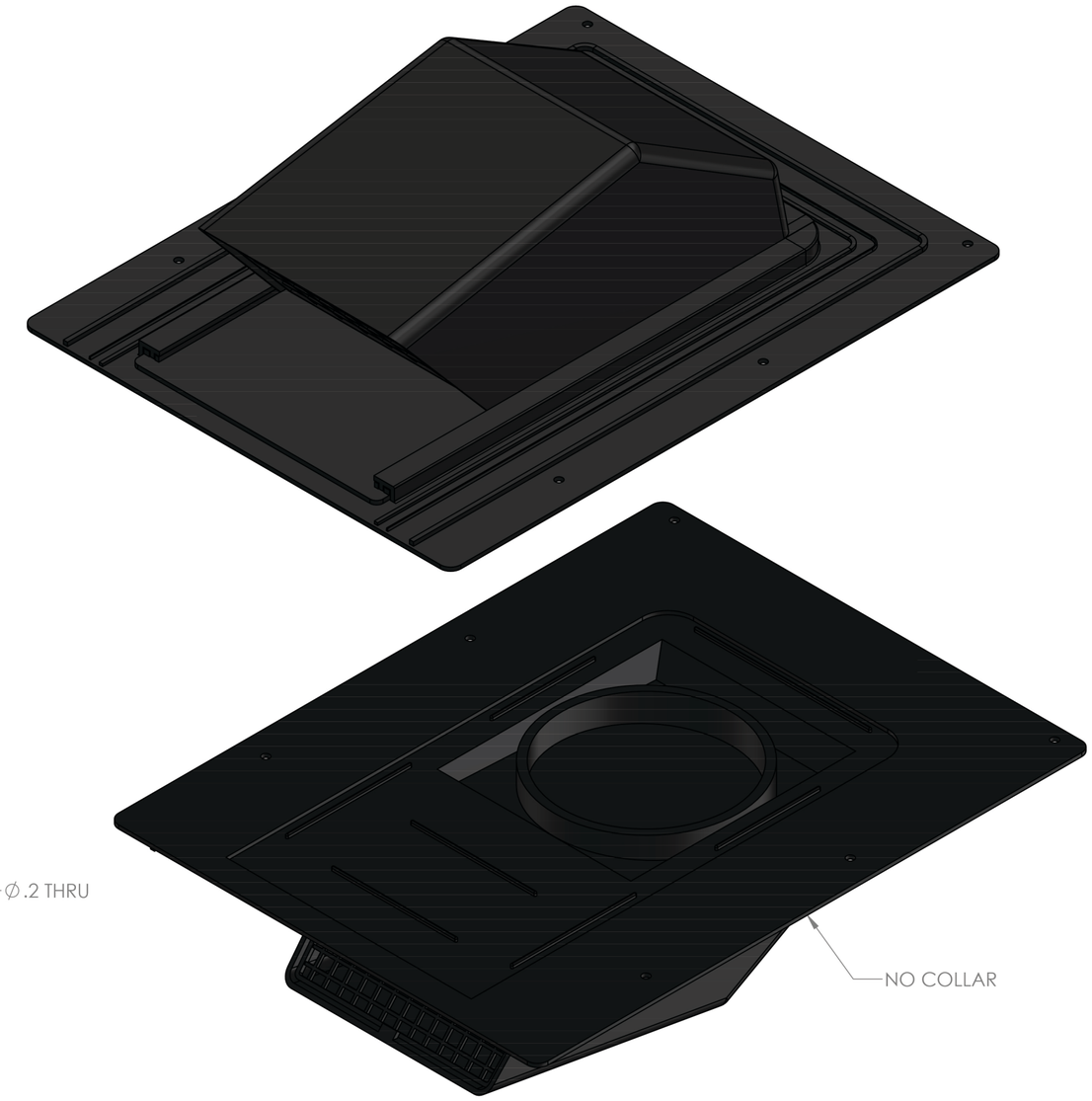

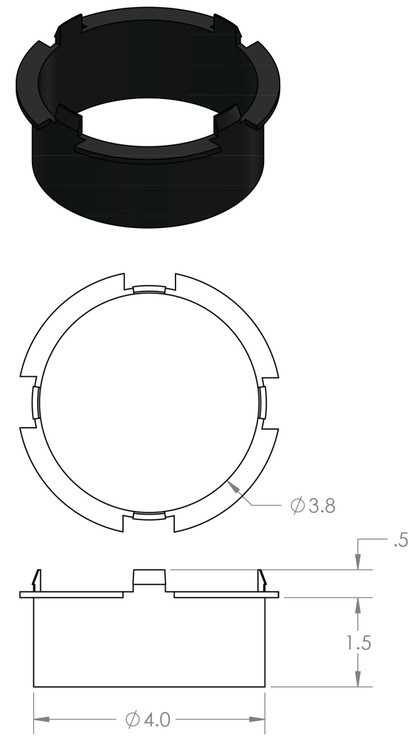

COLLAR
SCALE 1:2

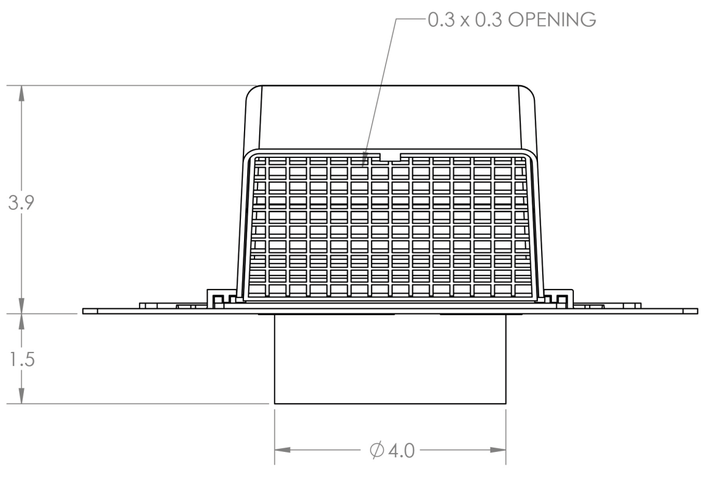

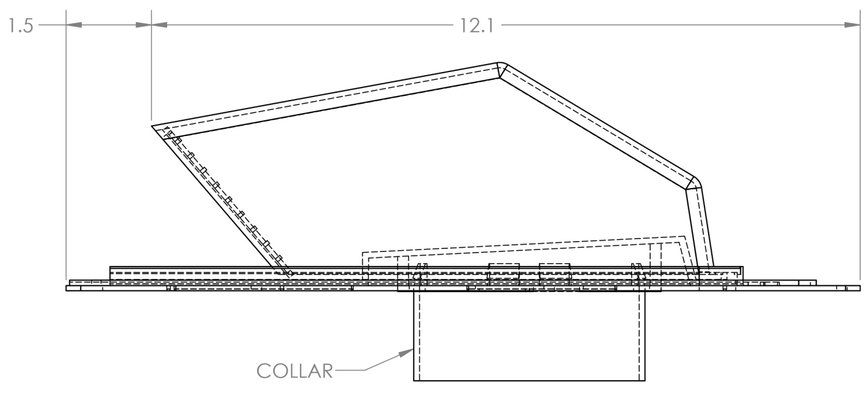

Lambro Industries, Inc.
115 Albany Ave.
Amityville, NY 11701
(631) 842-8088
www.lambro.net

OUR PRODUCTS ARE MADE IN THE USA

PROPRIETARY AND CONFIDENTIAL

THE INFORMATION CONTAINED IN THIS DRAWING IS THE SOLE PROPERTY OF LAMBRO. ANY REPRODUCTION IN PART OR AS A WHOLEWITHOUT THE WRITTEN PERMISSION OF LAMBRO IS PROHIBITED.

NEXT ASSY	USED ON
APPLICATION	

UNLESS OTHERWISE SPECIFIED:

DIMENSIONS ARE IN INCHES
TOLERANCES:
FRACTIONAL ±1/16
ANGULAR: MACH ± 1 BEND ±.01
TWO PLACE DECIMAL ±0.01
THREE PLACE DECIMAL ±0.005

INTERPRET GEOMETRIC TOLERANCING PER:

MATERIAL

FINISH

DO NOT SCALE DRAWING

	NAME	DATE
DRAWN		
CHECKED		
ENG APPR.		
MFG APPR.		
Q.A.		

COMMENTS:
Net Free Area (NFA)
Without Screen: 16 sq. in.
With Screen: 10 sq. in.

TITLE: Black ABS Plastic Roof Exhaust Vent
Damper - 1/4" Removable Screen
4" Snap-on Collar - 1.5" Length

SIZE	DWG. NO.	REV
C	3540RCS	
SCALE: 1:2	WEIGHT:	SHEET 1 OF 1